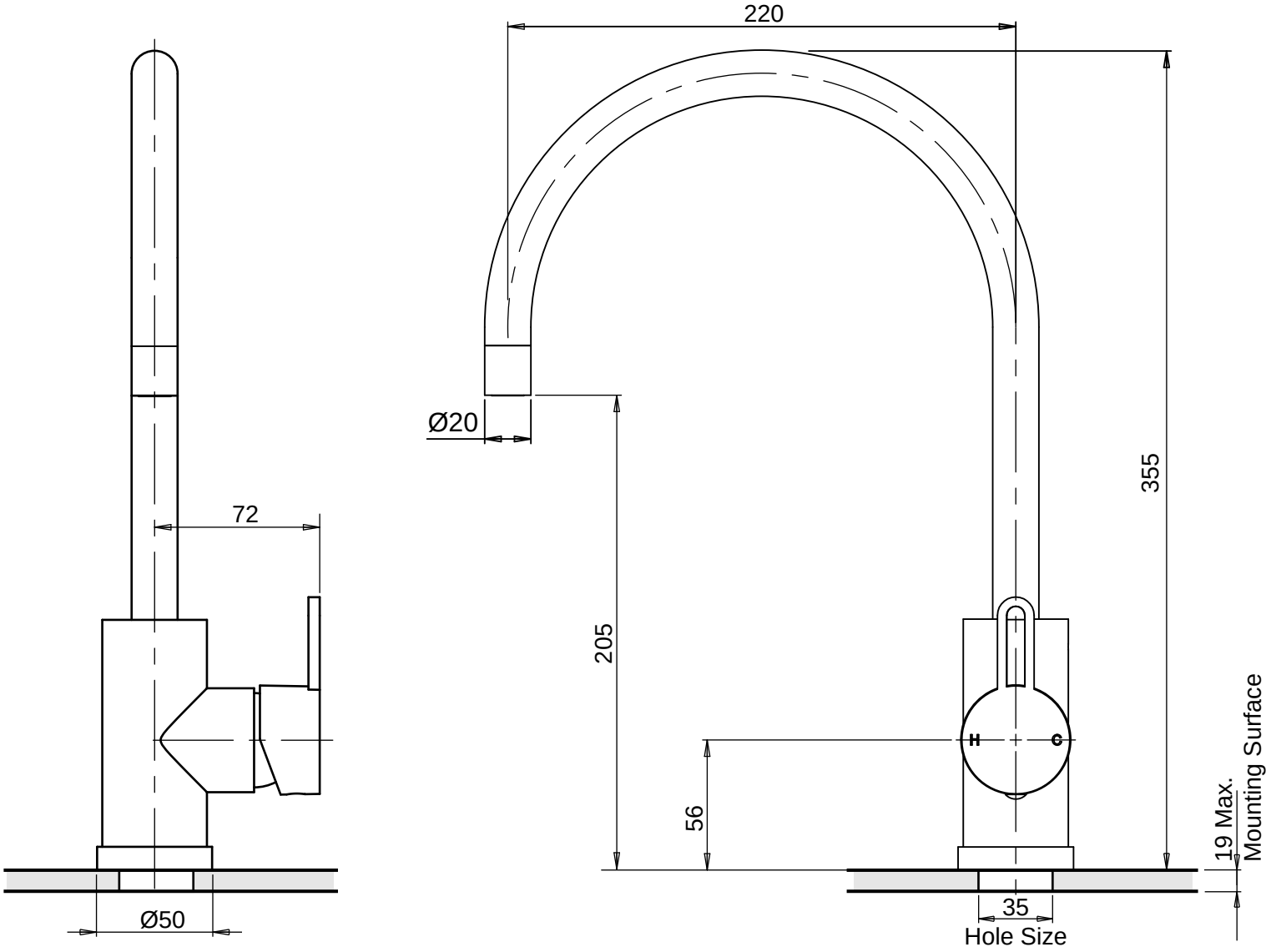

Lido

Side Lever Mixer (220mm) Gooseneck

Part Code: LD733

Available Finishes: Chrome

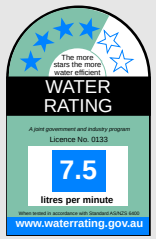

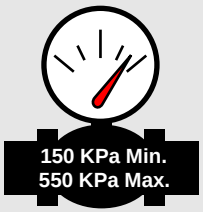

Recommended working pressure

Note: If the pressure Exceeds or is likely to exceed 550KPa, an approved pressure limiting device must be fitted.

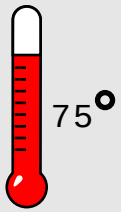

Maximum hot water temperature